BROMIC HEATING

TUNGSTEN SMART-HEAT™
GAS HEATER
BY BROMIC

INSTALLATION, INSTRUCTION AND SERVICE MANUAL

SUITABLE FOR GAS RADIANT HEATER MODELS: TUNGSTEN 300 - BURNER AND TUNGSTEN 500 - BURNER

DANGER

If you smell gas:

1. Shut off gas to the appliance
2. Extinguish any open flame
3. If odor continues, keep away from the appliance and immediately call your gas supplier or fire department.

WARNING: For Outdoors Use Only.

ENGLISH VERSION FROM PAGES 1 - 27

WARNING

Do not store or use gasoline or other flamable vapor and liquids in the vicinity of this or any other appliance.

An LP-cylinder not connected for use shall not be stored in the vicinity of this or any other appliance.

WARNING: Improper installation, adjustment, alteration, service or maintenance can cause property damage, injury or death. Read the installation, operating and maintenance instructions thoroughly before installing or servicing this equipment.

Version 2.3 USA - CANADIAN

⚠ IMPORTANT

This manual contains important information about the assembly, operation, and maintenance of Tungsten Smart-Heat Series Heaters. Please pay close attention to the important safety information shown throughout this instruction manual. Any safety information will be accompanied by the following safety alert symbols:

⚠ DANGER, ⚠ WARNING, ⚠ IMPORTANT

- READ THIS MANUAL CAREFULLY before installing or servicing this product.
- Improper installation, operation, or maintenance can result in death, severe injury, or property damage.
- Installation must be carried out by Authorized person/s in accordance with local codes, or in the absence of local codes, with the National Fuel Gas Code, ANSI Z223.1/NFPA 54, Natural Gas and Propane Installation Code, CSA B149.1, or Propane Storage and Handling Code, B149.2.
- The heater, when installed, must be electrically grounded in accordance with local codes or, in the absence of local codes, with the National Electrical code, ANSI/NFPA 70 or the Canadian Electrical Code, CSA C22.1.
- This appliance is to be used ONLY for outdoor use
- When installed outdoors this appliance MUST be protected from rain.
- **US Pat. 9,874,348**
  CA Pat. 2,788,696

BROMIC HEATING

Head Office: 1 Suttor Street, Silverwater, Sydney, NSW 2128 Australia
Telephone: 1300 276 642 (within Australia) or +61 2 9748 3900 (from overseas) **Fax:** +61 2 9748 4289
Email: info@bromicheating.com **Web:** www.bromicheating.com

Note: Bromic Heating Pty Ltd reserves the right to make changes to specifications, parts, components and equipment without prior notification. This Installation, operation and service manual may not be reproduced in any form without prior written consent from Bromic Heating Pty Ltd.

CONTENTS

IMPORTANT NOTES & WARNINGS 4

PRODUCT OVERVIEW 5

- PRODUCT DESCRIPTION 5
- SPECIFICATIONS 5
- GENERAL INFORMATION 6
- PRODUCT FEATURES 6

INSTALLATION REQUIREMENTS 6

- GAS REQUIREMENTS 6
- INSTALLATION CLEARANCES 7

INSTALLATION INSTRUCTIONS 8

- HEATER INSTALLATION INSTRUCTIONS 8
- GAS SUPPLY INSTALLATION 12
- POWER SUPPLY INSTALLATION 12
- LEAKAGE TEST 12
- HEAT DEFLECTOR INSTALLATION INSTRUCTIONS 13
- CEILING MOUNT POLE INSTALLATION INSTRUCTIONS 13

OPERATING INSTRUCTIONS 14

- TURNING THE APPLIANCE ON 14
- TURNING THE APPLIANCE OFF 14

MAINTENANCE AND SERVICING 14

- REGULAR SERVICE REQUIREMENTS 14
- EXTERIOR SERVICING 14

OPTIMUM MOUNTING DISTANCE 15

HONEYWELL CONTROL 15

HONEYWELL VALVE 16

OPERATION DATA - FENWAL CONTROL BOX 17

DUNGS GAS VALVE 18

WHITE RODGERS GAS VALVE 18

WIRING DIAGRAM 19

REPLACEMENT PARTS 22

POST-INSTALLATION REPORT 24

TROUBLE SHOOTING 25

APPENDIX A 26

⚠ WARNING

- THIS APPLIANCE SHALL NOT BE INSTALLED OR USED IN RESIDENTIAL DOMESTIC INDOOR AREAS
- CHILDREN AND ADULTS SHOULD BE ALERTED TO THE HAZARDS OF HIGH SURFACE TEMPERATURES AND SHOULD STAY AWAY TO AVOID BURNS OR CLOTHING IGNITION
- YOUNG CHILDREN SHOULD BE CAREFULLY SUPERVISED WHEN THEY ARE IN THE AREA OF THE HEATER
- DO NOT USE OR STORE FLAMMABLE MATERIALS NEAR THIS APPLIANCE
- CLOTHING OR FLAMMABLE MATERIALS SHOULD NOT BE HUNG FROM THE HEATER OR PLACED ON OR NEAR THE HEATER
- DO NOT SPRAY AEROSOLS OR FLAMMABLE MATERIALS IN THE VACINITY OF THIS APPLIANCE WHILE IT IS IN OPERATION
- ANY GUARD OR OTHER PROTECTIVE DEVICE REMOVED FOR SERVICING THE HEATER (conducted by an authorized person) MUST BE REPLACED PRIOR TO OPERATING THE HEATER
- INSTALLATION AND REPAIR SHOULD BE DONE BY A QUALIFIED SERVICE PERSON. THE HEATER SHOULD BE INSPECTED BEFORE USE AND AT LEAST ANNUALLY BY A QUALIFIED SERVICE PERSON

Failure to follow the warnings and instructions in this manual could result in severe personal injury, death or property damage.

- This Installation, Operation and Maintenance manual should not be removed from the site of installation.
- Installer should leave manual with the customer for future reference.
- This Appliance is for outdoor areas only. (see attached diagrammatical representations of outdoor areas "Appendix A").
- Do not perform maintenance until heater has been turned off, power disconnected, and heater temperature has cooled to room temperature.
- Do not expose the burner to water or moisture. **THE APPLIANCE IS TO BE PROTECTED FROM RAIN.**
- Do not use the heater if any of these parts are exposed to water until the appliance is inspected or repaired by an authorized service person.
- The installer is to ensure that the requirements of the local authority, local gas fitting regulations, municipal building codes, and any other relevant statutory regulations are carried out.
- Certain materials or items, when stored under or near the appliance, will be subjected to radiant heat and could be seriously damaged. Ensure combustible materials eg. overhead structures, walls, floors, furniture, fixtures and plants are kept at least 3ft from the top and side.
- The whole gas system, hose assembly, regulator, pipes, and burner should be inspected for damage and leaks before use and at least annually by an authorized person for the life of the heater.
- All leak tests should be done with a soap solution. Never use an open flame to check for leaks.
- Do not use the heater until all connections have been leak tested by an authorized person.
- Inspect the hose assembly before each use of the appliance.
- The hose assembly must be replaced prior to the appliance being put into operation if there is evidence of excessive abrasion or wear, or if the hose is damaged.
- The replacement hose assembly must be CSA approved.
- The hose assembly is not to be located in areas where the hose may be subject to accidental damage
- This radiant heater is NOT intended to be installed on recreational vehicles and/or boats.
- Repair to be carried out ONLY by an authorized person.
- Improper installation, adjustment, or alteration can cause personal injury, property damage, or even death.
- Do not attempt to alter the unit in any manner.
- Remove transit protection before use.
- Never operate the heater in an explosive environment such as areas where gasorline or other flammable liquids or vapours are stored.
- Turn off the gas supply immediately if smell of gas is detected.
- Do not paint any surface of the heater.
- Do not throw objects at the heater.
- Control compartment, burner and circulation air passageways of the heater must be kept clean. Frequent cleaning may be required as necessary.
- Turn Gas Supply off when not in use.
- Check the heater immediately if any of the following occurs:
  - » The heater does not reach temperature.
  - » The burner makes popping noise during use (a slight noise is normal when the burner is ignited or extinguished).
- Young children should be supervised to ensure that they don't play with the appliance.
- This appliance is not intended for use by young or infirm persons unless they have been adequately supervised by a responsible person to ensure that they can use the appliance safely.
- Check for damage to the appliance regularly. If damage to the cord, plug or appliance is suspected, discontinue use immediately and contact the supplier or qualified person for repair.
- If the cord, plug or appliance is damaged, unplug from the outlet, discontinue use immediately, and only an authorized person or similar may repair the unit.
- Avoid inhaling fumes emitted from the heater's first use. Smoke and odour from the burning of oils used in manufacturing will appear. Both the smoke and odour will dissipate after approximately 30 minutes.
- Ensure that a watertight seal is maintained on the electrical control box at all times
- Regularly check for damage to the rubber seals. If damage to the rubber seals is suspected, discontinue use immediately, switch off power and contact the place of purchase or authorized service technician for repair.

PRODUCT DESCRIPTION

The Tungsten Smart-Heat Gas Radiant Heaters are designed to provide effective outdoor heating to both commercial and residential premises whilst offering an appealing design.

The heaters incorporate full function electronic controls, allowing them to be operated remotely from a conveniently located switch. The heaters have been designed to withstand the rigors of the outdoors.

SPECIFICATIONS

	TUNGSTEN 300		TUNGSTEN 500	
Gas type	Propane (LPG)	NATURAL GAS	Propane (LPG)	NATURAL GAS
Manufactured by	BROMIC HEATING PTY LTD - 1 SUTTOR ST SILVERWATER, NSW, 2128, SYDNEY AUSTRALIA.			
Approval No.	ETL & cETL Listing 4009079			
Gas Consumption	26,000 BTU	26,000 BTU	43,000 BTU	43,000 BTU
Gas Type	Propane Gas (LPG) Only	Natural Gas	Propane Gas (LPG) Only	Natural Gas
Max. Line Pressure	14" W.C.	14" W.C.	14" W.C.	14" W.C.
Min. Line Pressure	11" W.C.	6" W.C.	11" W.C.	6" W.C.
Manifold Pressure At Valve Test Point	10" W.C.	5" W.C.	10" W.C.	5" W.C.
Orifice Size	0.85mm	1.3mm	0.85mm	1.3mm
Weight	33lb	33lb	44lb	44lb
Voltage	110 Volt	110 Volt	110 Volt	110 Volt
Current	< 2 Amp	< 2 Amp	< 2 Amp	< 2 Amp

TUNGSTEN SMART-HEAT HEATER DIMENSIONAL DETAILS

Without Heater Deflector

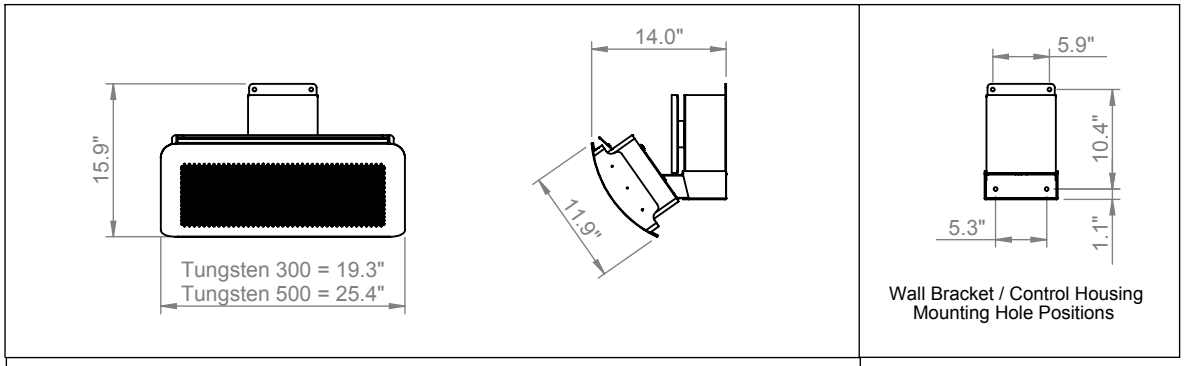

With Heater Deflector

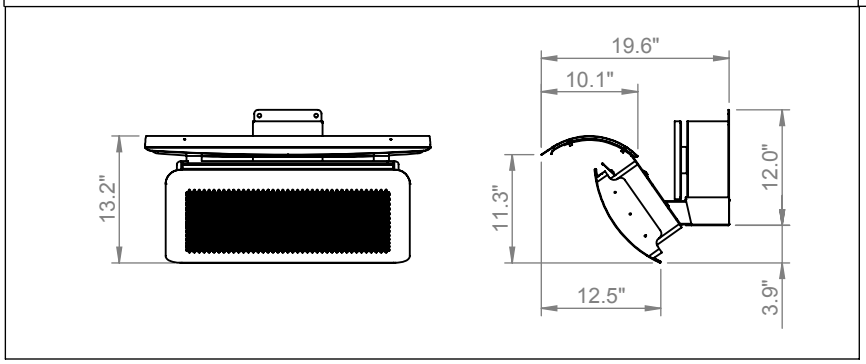

⚠ IMPORTANT

This appliance is NOT approved for indoor use and must be installed by authorized persons only in accordance with local codes, or in the absence of local codes, with the National Fuel Gas Code, ANSI Z223.1/NFPA 54, Natural Gas and Propane Installation Code, CSA B149.1, or Propane Storage and Handling Code, B149.2.

This appliance is to be protected from rain. Install under a protective cover.

GENERAL INFORMATION

The Tungsten Series Gas radiant heaters are suitable for outdoor spaces. In addition to the installation instructions provided, authorized installers must abide by ***local codes, or in the absence of local codes, with the National Fuel Gas Code, ANSI Z223.1/NFPA 54, Natural Gas and Propane Installation Code, CSA B149.1, or Propane Storage and Handling Code, B149.2***. Please note that these standards are subject to change.

The heater is designed to function in winds up to 10mph. The heater is subject to reduced performance or failure in adverse weather conditions such as high wind or extreme saturation.

PRODUCT FEATURES

Tungsten Smart-Heat gas radiant heaters are revolutionizing the outdoor heating industry by introducing groundbreaking benefits never seen before in traditional gas or electric heaters. Tungsten Smart-Heat heaters have set the industry benchmark with stylish good looks and world-first innovation.

Tungsten Smart-Heat heaters excel in the areas of:

- Aesthetic appeal
- Innovation
- Performance
- Flexibility
- Cost effectiveness

For more detailed product information, visit www.bromicheating.com

INSTALLATION REQUIREMENTS

⚠ IMPORTANT

This appliance shall only be used in above ground open-air situations with:

- natural ventilation
- without stagnant areas
- where gas leakage and products of combustion are rapidly dispersed by wind and natural convection

Any enclosure in which the appliance is used shall comply with one of the following:

1. An enclosure with walls on all sides, but at least one permanent opening at ground level (ref. Appendix A, Example 1)
2. Within a partial enclosure that includes an overhead cover and no more than two walls (ref. Appendix A, Example 2)
3. Within a partial enclosure that includes an overhead cover and more than two walls, the following shall apply:
   - At least 25% of the total wall area is completely open (ref. Appendix A, Example 4), and
   - At least 30% of the remaining wall area is open and unrestricted (ref. Appendix A, Example 4)

Note: The definition of outdoors is an above ground open-air situation with natural ventilation, without stagnant areas, where gas leakage and products of combustion are rapidly dispersed by wind and natural convection.

GAS REQUIREMENTS

Tungsten LPG Models:

- Use Propane (LPG) gas only
- The approved manifold pressure to the appliance is 10"W.C.
- The MIN inlet pressure to the appliance is 11" W.C
- The MAX inlet pressure to the appliance is 14" W.C

Tungsten Natural Gas Models:

- Use Natural Gas Only
- Always use Natural Gas Regulator (supplied internal to the gas valve)
- Ensure that Inlet pressure to the regulator does not exceed 14" W.C.
- The MIN inlet pressure to the appliance is 6" W.C
- The approved manifold pressure to the appliance is 5"W.C.

INSTALLATION CLEARANCES

When selecting the installation location for the Tungsten Series Heaters, the following mounting clearances should be followed.

Care should be taken to ensure that the heater is not installed:

- Where heat/ignition can cause damage to gas cylinders/ lines
- Near other combustible materials
- In open locations subject to rain
- In indoor residential locations
- In areas without sufficient clearances (refer below)

Note: When Installing with No protective cover, the following installation clearances shall apply:

The stated clearance to combustible materials represents surface temperature of 149°F above room temperature. Building material with a low heat tolerance (such as plastic, vinyl siding, canvas, tri-ply etc.) may subject to degradation at lower temperature. It is the installer's responsibility to assure that adjacent materials are protected.

Note: When installing with the Tungsten Smart-Heat Heat Shield (Part No. 2620165 or 2620166) the following installation clearances Shall Apply:

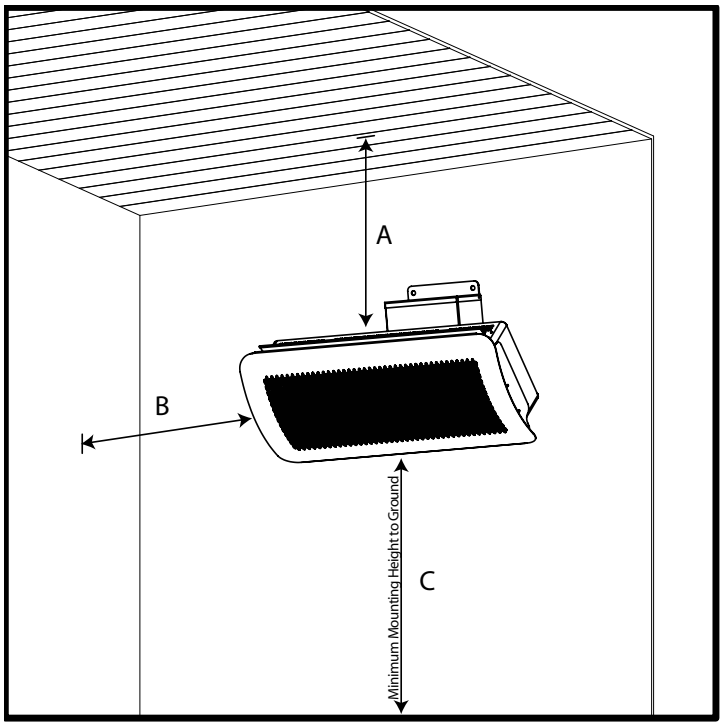

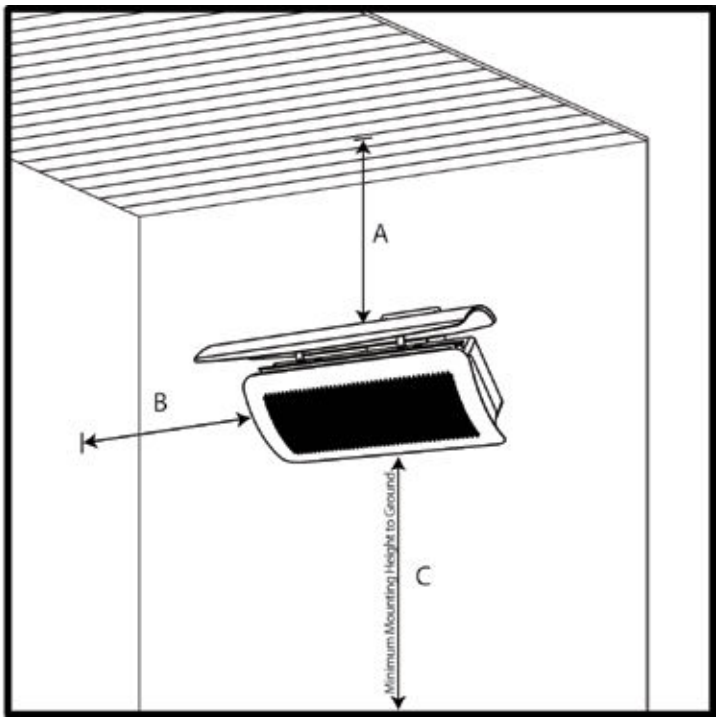

Minimum height to combustible materials			
Model	A	B	C
300 Series	3ft	3ft	8ft
500 Series	3ft	3ft	8ft

Minimum height to combustible materials			
Model	A	B	C
300 Series	14"	3ft	8ft
500 Series	14"	3ft	8ft

Note: Heater should be installed in such a way so as to allow adequate;
Clearance around air openings to combustion chamber
Clearance from combustible material
Provisions for accessibility and clearance for combustion and ventilating air supply.

HEATER INSTALLATION INSTRUCTIONS

⚠ WARNING

This appliance must be installed and used in accordance with local codes, or in the absence of local codes, with the National Fuel Gas Code, ANSI Z223.1/NFPA 54, Natural Gas and Propane Installation Code, CSA B149.1, or Propane Storage and Handling Code, B149.2 and must meet all the requirements stipulated in the "Installation Requirements" section of this manual.

⚠ WARNING:

Installation should be done by a qualified service person.

⚠ CAUTION

Please see specifications for the weight of the Heater. The installer of the Tungsten Smart-Heat Radiant Heaters must comply with all relevant State Occupational Health & Safety Regulations.

Step 1. Mount Wall Bracket/Control Housing To Wall:

- Remove Wall Bracket/Control Housing From Packaging
- Place the mounting bracket in position and mark the fixing hole location on the wall. Drill holes using appropriate drill size and type.
- Attach the bracket to the wall using appropriate fixtures

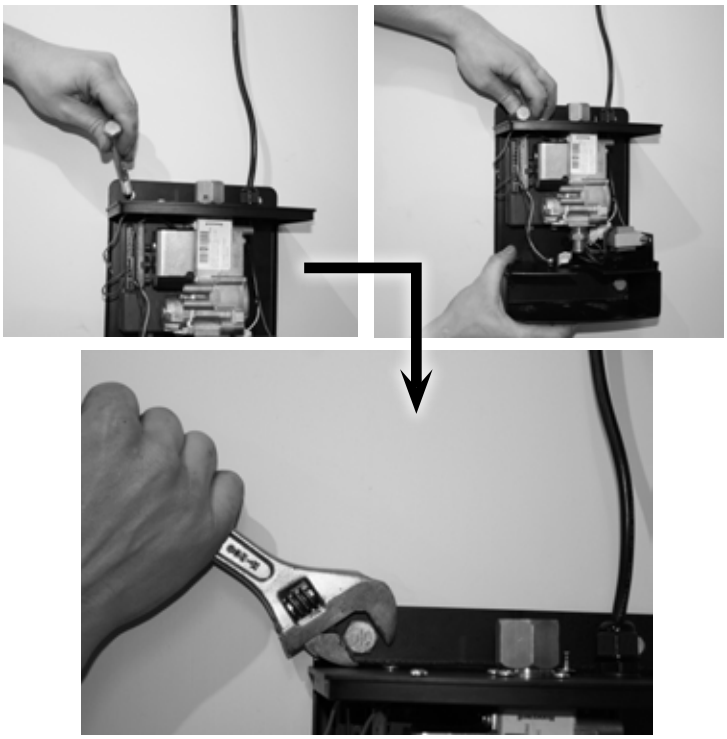

⚠ IMPORTANT

The Heater shall be firmly and securely attached to the wall. **For Brick and masonry**, use M8 "Flush Head" "Dynabolts" (or equivalent). **For Wood / Timber fixtures**, use suitable screw fixings no less than 60mm in length.

⚠ WARNING

When mounting wall bracket/ control housing, ensure the anchoring to the structure is of sufficient strength, quality and workmanship to support the weight of the heater and any other load that could be applied to the fixture.

Step 2. Connect CSA approved Flexible Gas Connector (as supplied) to the inlet fitting on the heater using 2 wrenches to tighten. Leak Test by applying compressed air (1/2" PSI) to open end of flexible hose. Spray gas fittings with a soapy water solution and Check for leaks. Alternatively, leak check can be done after assembly using inspection hole on bracket arm. (see. leakage test section of this manual).

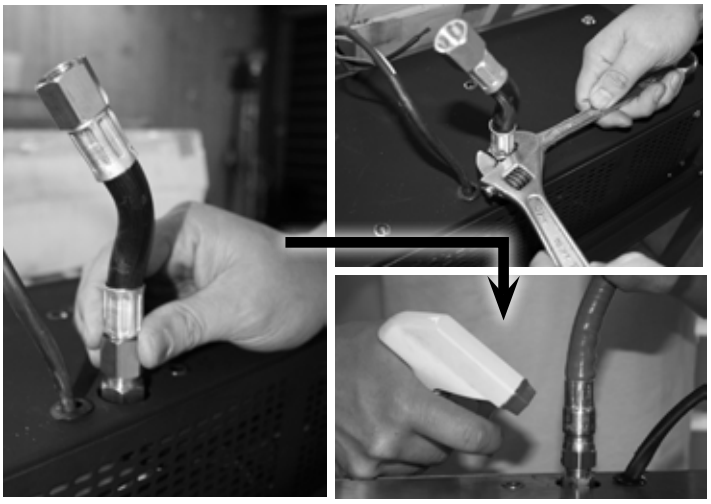

Step 3. Fix Mounting Arm to the back of the heater –

- Slide Gas Connector and Wiring Harness inside the centre of the arm and have them exit through the shaped cut-out on top surface of the arm
- Ensure that the arm faces downwards at a 55° angle
- Position the 4 mounting holes on the arms plate over the corresponding fixtures on the heater - Manipulate the gas hose as necessary to allow for correct alignment
- Insert and tighten 4 M6 bolts as provided to fit mounting arm to heater.

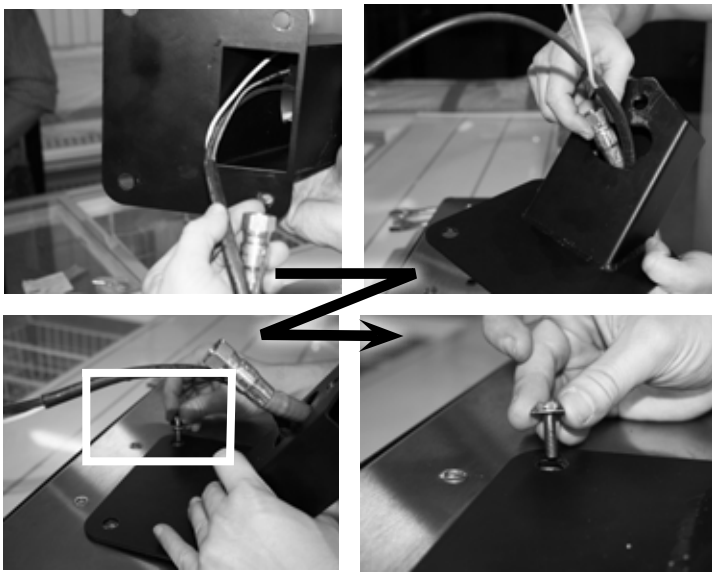

Step 4. Attach Heater to Wall Bracket/Control Housing

- Remove Front Cover from Control Housing
- Attach Heater to Wall Bracket/Control Housing by inserting Mounting Arm into lower channel of Wall Bracket. Ensure that the Gas Hose and Wiring Harness slide through the groove on top side of the control Housings lower channel and remain undamaged by the metals edges during assembly.
- It may be necessary to manipulate the gas Hose so that the arm can slide into place.

TIP: Do not install the mounting pin at this point.

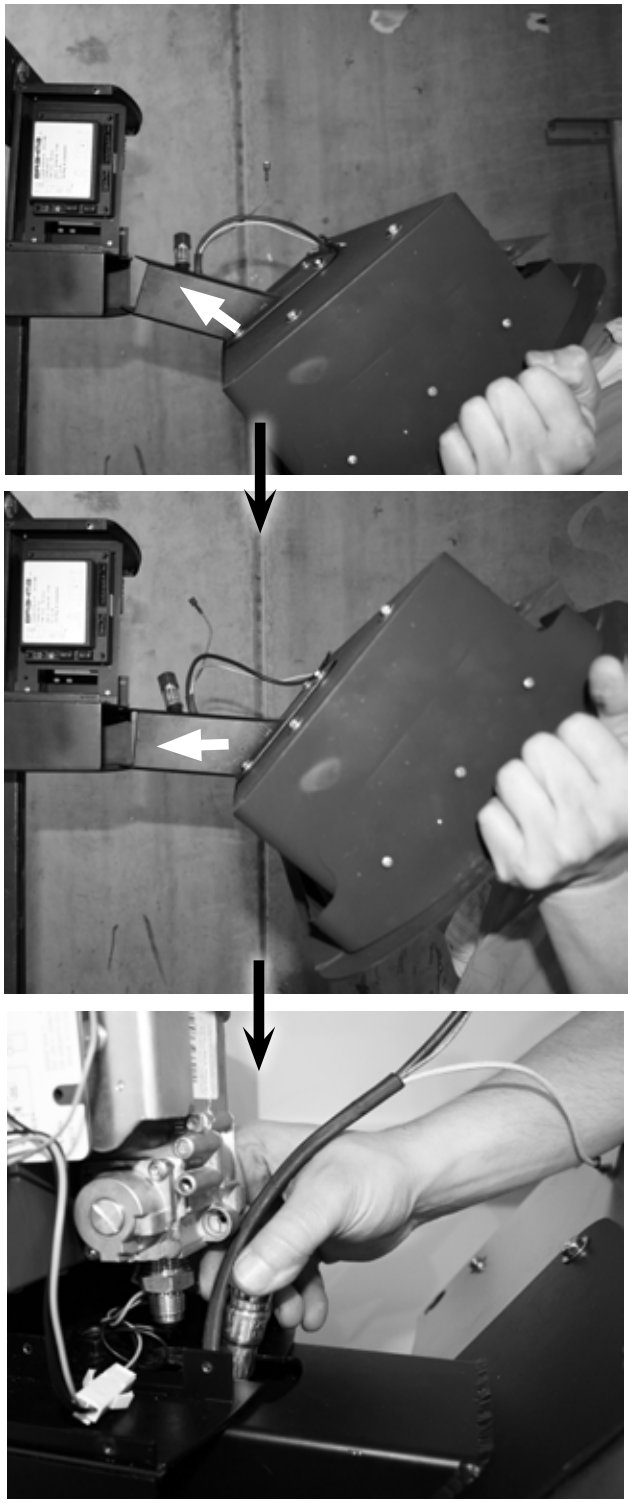

Step 5. Connect the CSA approved flexible connector to the Gas Valve Outlet Fitting

- Position heater and hose so that the gas hose and fitting are in alignment
- NOTE: ensure that the hose nut and valve fitting are parallel to one another and threads are engaged correctly before tightening! Incorrect installation can cause gas leaks and damage components.

TIP: Sliding the mounting arm inside the control housing's channel can help accurately Position the Gas hose in place under the gas valve's fitting.

- Spanner Tighten using 2 wrenches, and leak test using soapy water (see section "leakage test")

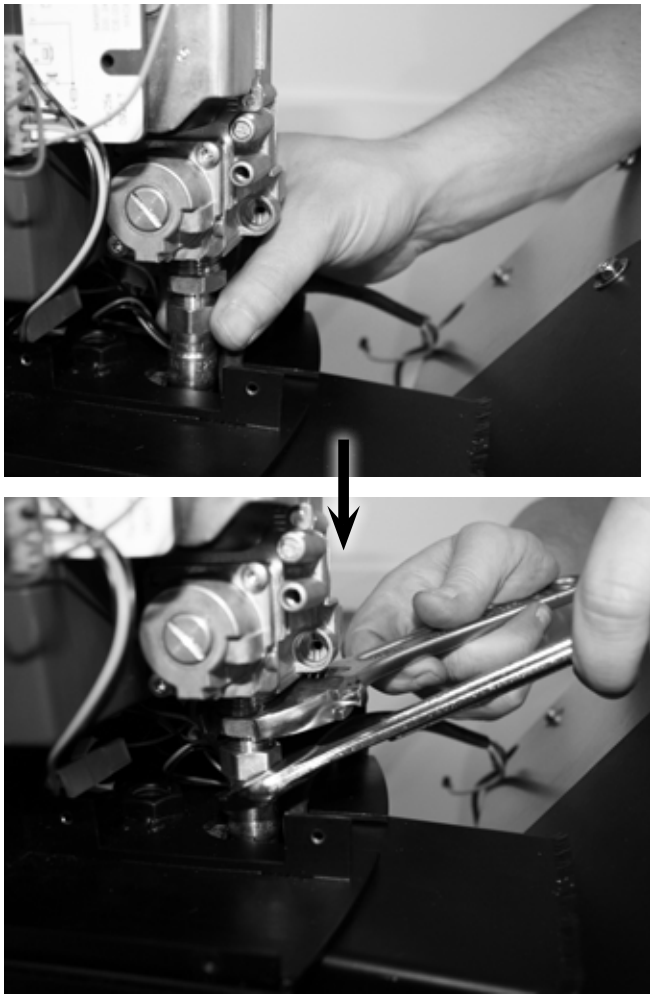

6. **Insert Pivot Bolt**
   - Position Arm so that the rear hole's on the mounting arm and Control Housing are in alignment
   - Insert Bolt and washer (as supplied) through Control Housing and Mount Arm, using the hole located on the bottom surface of the Control Housing, towards the rear. Spanner tighten in place
   - Select desired heater angle and insert the M6 Bolt and washer (as supplied) through the bottom surface of Control Housing into the mounting arm, using the corresponding hole. (Heaters angle will be 0°, 10° or 20°). Spanner tighten in place

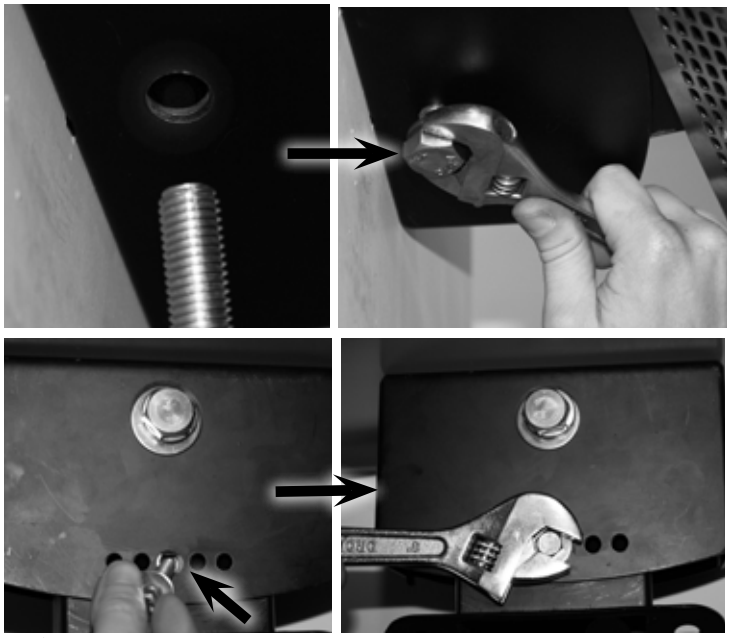

⚠ IMPORTANT

Electrical connections must be completed by trained and authorized electrical technicians only!

7. Connect the 3 wires from the heater by carefully following the instructions below

PLEASE NOTE: THERE IS NO NEED TO REMOVE OR UNPLUG THE CONTROL MODULE FROM THE GAS VALVE OR WALL BRACKET ASSEMBLY

For Honeywell Control

- Using a pair of needle nose pliers, grip the white ionisation terminal as shown, being mindful of the terminal pins of the control module.

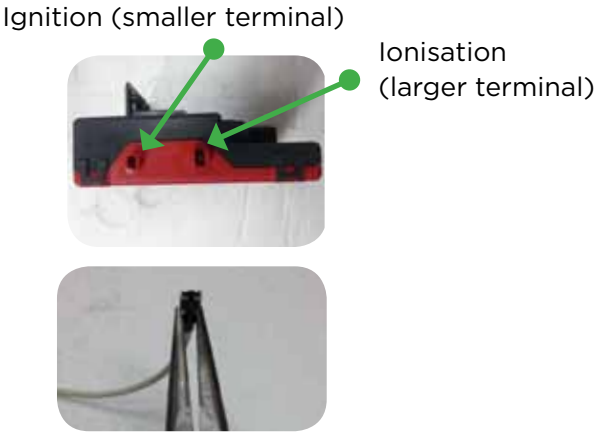

- Insert the ionisation terminal into the terminal pin furthest away.
- Ensure that the terminal firmly clicks into place.

- Insert Repeat the process with the black ignition cable inserting the terminal into the closer, smaller terminal pin.

- Insert Plug the green earth terminal into one of the available spade terminals attached to the top of the wall bracket.

For Fenwal Control

- Feed wiring harness (3 wires) through opening under Fenwal controller so that wires are positioned to the left of the controller.

- Connect black ignition cable directly to control box at terminal marked:

- Connect white ionisation cable directly to control box at terminal marked: S1

- Connect ground terminal over ground tab, attached to body of control housing and marked with the symbol:

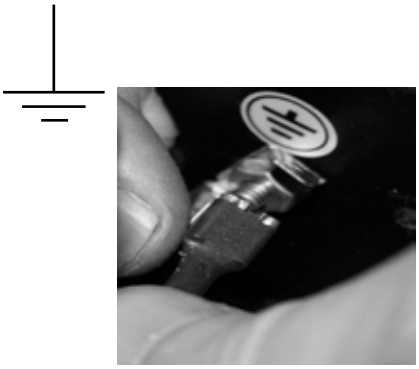

8. Connect gas inlet fitting to mains gas supply in accordance with local gas installation code and gas supply installation section of manual. Leak test with soapy water.

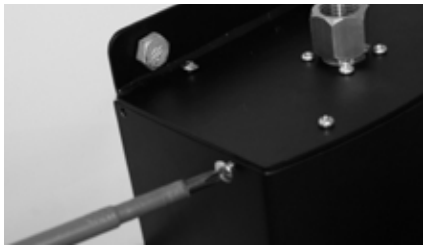

9. Fix Front cover to control housing using the 4xM4 screws provided.

10. Main Power supply connection is to completed in line with instructions in the "Power supply installation" section of this manual.

IMPORTANT

Ensure that a water tight seal is maintained.

IMPORTANT

After gas installation and electrical installation is complete, all gas lines should be tested for leaks using a soapy water solution. See Section titled "Leakage Test" for further information. Ensure gas pressure meets the requirements outlined in Gas Supply Installation above.

GAS SUPPLY INSTALLATION

⚠ IMPORTANT

- **All gas supply installation work must be performed by trained and authorized person(s) and comply with the requirements of local Gas Installation Codes.**
- **All Piping Joints should be tested for leaks with a soapy water solution before use.**
- **Gas hose must be located out of pathway where people may trip over it, or in areas where the hose may be subject to accidental damage.**

Verify the type of gas supply complies with the appliance rating plate, located at the back of the heater.

The inlet connection to the heater control box is a 1/2" NPT Female.

The Control box has been fitted at the factory with an approved manual isolating valve in accordance with **local Gas Installation Codes**.

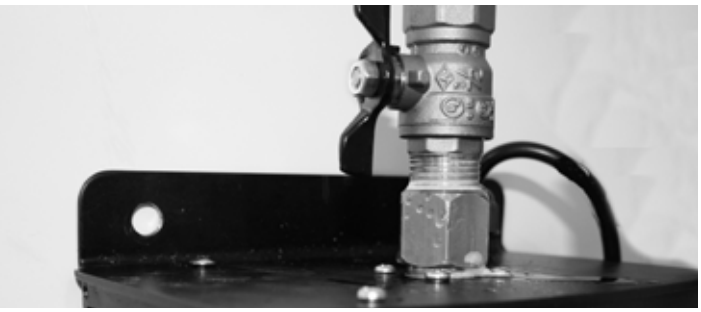

Tighten all the connections and then turn on the gas supply. Check for gas leakage with a soapy water solution. (See section titled "Leakage Test").

Do not use an open flame to check for leaks.

When the heater is operating, check gas pressure at the test point and ensure the manifold pressure to the heater is:

NG:	5" W.C.
PROPANE / LPG:	10" W.C

Gas supply pressure must be limited to 14" W.C. If gas line pressure exceeds this level, a separate pressure reducing regulator must be installed.

The appliance and its individual shutoff valve must be disconnected from the gas supply piping system during any pressure testing of that system at test pressures in excess of 1/2 psi.

The appliance must be isolated from the gas supply piping system by closing its individual manual shutoff valve during any pressure testing of the gas supply piping system at test pressures equal to or less than 1/2 psig.

POWER SUPPLY INSTALLATION

⚠ WARNING

This heater is equipped with a three-prong (grounding) plug for your protection against shock hazard and should be plugged directly into a properly grounded three-prong receptacle. Do not cut or remove the grounding prong from this plug.

The Tungsten Smart-Heat Heater comes standard with 36" of power cord in addition to the Approved 3 pin power plug.

If an appropriate power socket is available, the heater can be plugged into this power socket and operated using the on/off switch supplied on the power socket. Alternatively, the power installation can be tailored to suit the site requirements by an Authorized Electrician.

Keep electrical supply cord away from any heated surface and flue gasses.

Please Note:
Tungsten Smart-Heat Heaters do not have their own on/off switch. Operation should be controlled via the main power supply.

⚠ WARNING

Ensure that power socket is switched off before plugging in power cord.

LEAKAGE TEST

Gas connections on the heater are leak tested at the factory prior to shipment. A complete gas tightness check must be performed at the installation site due to possible mishandling in shipment or excessive pressure being applied to the heater. Check ALL connections.

- The heater must be checked with the gas supply turned on.
- Make sure the safety control valve is in the OFF position.
- Make a soap solution of one part liquid detergent and one part water. The soap solution can be applied with a spray bottle, brush or rag. Soap bubbles will appear in case of a leak.
- Turn the gas supply ON.
- In case of a leak, turn off the gas supply. Tighten any leaking fittings, then turn the gas supply on and recheck.
- Never leak test while smoking.
- The following points MUST be leak checked before operation.

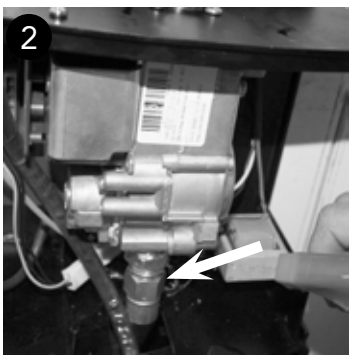

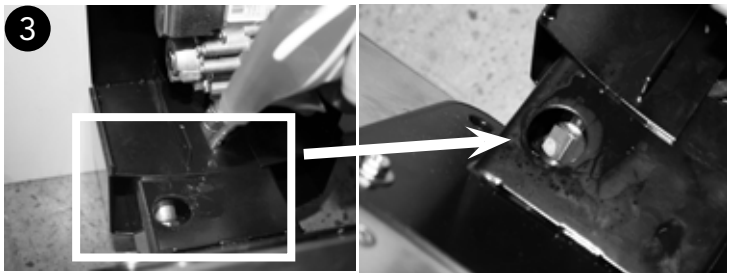

NOTE: Tungsten Heating recommends running power and gas lines, to the heater, inside the pole to reduce visibility and likelihood of damage.

HEAT-DEFLECTOR INSTALLATION

1. Assemble Heat Deflector following instructions supplied in the Heat Deflector carton.
2. Mount Heat Deflector to back of heater by loosening the two screws and secure brackets underneath washers. Re-tighten screws to original position using screw driver.

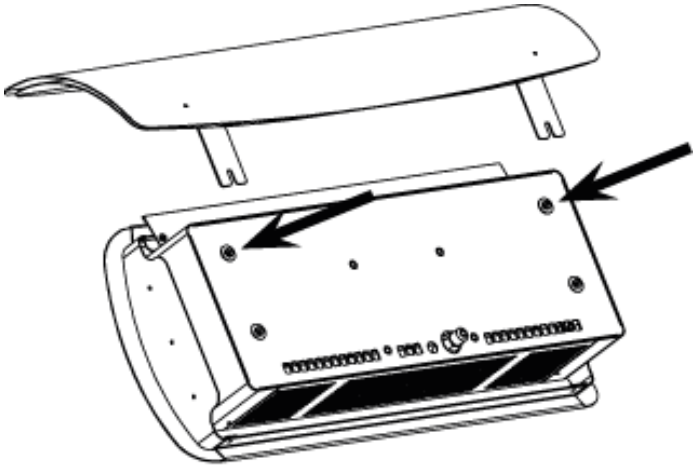

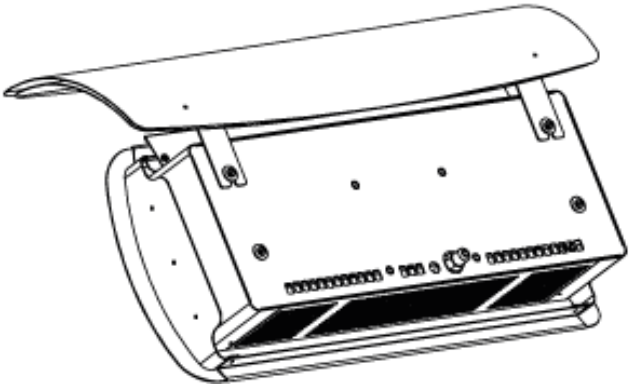

CEILING POLE INSTALLATION

⚠ WARNING

When mounting ceiling pole, ensure the anchoring to the structure is of sufficient strength, quality and workmanship to support the weight of the heater and any other load that could be applied to the fixture. Note: Ceiling pole must be perpendicular (90deg) to the ground when mounted (irrespective of pitched or flat ceiling).

1. Mount Top Bracket to ceiling or support beam using suitable fixings no less than 60mm length.
2. Assemble pole to the mounting bracket using the M8x100mm and M19x100mm bolts, and fix using nuts and washers (as supplied).
3. Assemble both lower paddles to the pole (back to back) and insert 3 M10x100mm bolts and fix using nuts and washers (as supplied).
4. Fix Heater to Lower paddles using suitable fixtures.

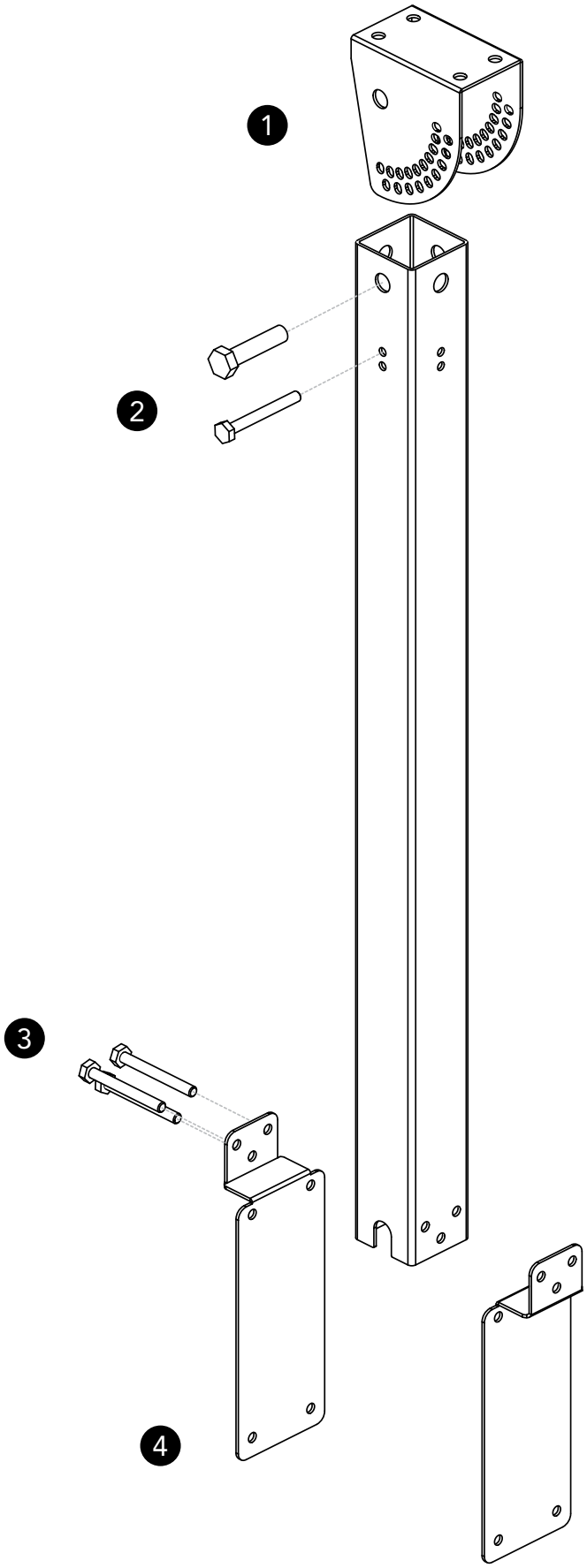

OPERATING INSTRUCTIONS

TURNING THE APPLIANCE ON

1. Ensure that gas installation and power installation has been carried out in accordance with the manufacturers instructions outlined in this document.
2. Turn on gas supply.
3. Ensure correct gas supply pressures are set.
4. Switch on power to heater.
5. If Gas heater does not light, turn power off.
6. Wait 5 seconds before turning power back on. If heater does not ignite after 5 attempts, consult the troubleshooting section of this manual, or contact Bromic Heating Pty. Ltd for service information.

TURNING THE APPLIANCE OFF

1. For temporary shutdown, turn off power.
2. For permanent shutdown, turn off power and shut off gas supply.

NOTE: The appliance must be completly shutoff for a period of 5 minutes before being relighted.

⚠ IMPORTANT

Check the heater immediately if any of the following occurs:

- The heater does not reach temperature.
- The burner makes popping noise during use (a slight noise is normal when the burner is ignited or extinguished).

Note: Avoid inhaling fumes emitted from the heater's first use. Smoke and odour from the burning of oils used in manufacturing will appear. Both the smoke and odour will dissipate after approximately 30 minutes.

Installers please Note:
When the installation and testing is completed, make sure that the customer knows how to operate the heater. Leave the operating instructions with the customer.

MAINTENANCE AND SERVICING

It is important that regular maintenance is carried out on the heater to maintain efficient operation. All maintenance should be carried out ONLY by authorized service personnel.

Control compartment, burner and circulation air passageways of the heater must be kept clean. Inspect and clean at least every six months or more frequently in adverse conditions.

Never obstruct the flow of combustion and ventilation air. Always keep the appliance area clear and free from combustible materials, gasoline and other flamable vapors and liquids.

Do not clean heater with cleaners that are combustible or corrosive.

REGULAR SERVICE REQUIREMENTS

1. CSA approved Gas Hose, located within the mounting arm, must be checked at least once annually. The hose must be replaced if there is any evidence of excessive wear, or if the hose is damaged. The replacement hose assembly must be CSA approved with 3/8"SAE flared ends. To Check the Gas Hose, remove control housing cover by removing 8 screws and slide cover outwards. Alternatively, disassemble heater by reversing the installation instructions as outlined in Installation section of this handbook.
2. **VISUALLY CHECK BURNER FLAMES**. During heaters function visually check that all burners are alight and glowing hot. This can be done by observing the red glow through the face, or by peering down the product combustion passageway. Note: A slight variation in colour is to be expected.

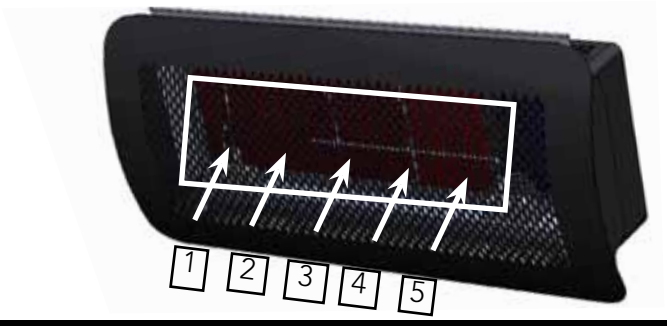

3. **Clean burners:** Burners can be cleaned by directing compressed air (max20PSI) at outlet ports. Avoid directing air at gasket material between ceramic tile and burner cup.
4. **Clean manifold and injectors:** Undo gas hose from gas valve outlet (heater should be switched off) and inject compressed air (max20PSI) down the inlet fittings.
5. **Clean dust and foreign matter from inside of heater housing:** Open up rear housing and clear dust using compressed air (max20PSI) and a damp cloth.
6. Remove debris, spider and insect nests from, control compartment, burner and circulation air passageways of the heater with heavy-duty pipe cleaner or compressed air to keep appliance clean and safe for use. Never clear ports or other openings with toothpicks or other articles that will break and block the ports.
7. In a salt-air environment, such as near an ocean, corrosion occurs more quickly than normal. Check frequently for corroded areas and repair them promptly.

⚠ IMPORTANT

More frequent cleaning may be required as necessary. It is imperative that control compartment, burners and circulating air passageways of the heater be kept clean.

EXTERIOR SERVICING

The exterior Tungsten Smart-Heat Heater components are constructed from stainless steel, and high temperature coated black paint. For all exterior black parts (excluding fascia trims), a brushed finish has been used. This is not a coating and under prolonged use, may slightly discolour from high temperatures emitted by the heater. This is a normal occurrence and does not affect the operation of the appliance.

Replacement parts can be purchased to restore the heater to its original appearance from Bromic Heating Pty Ltd. (Refer to parts list in manual).

⚠ IMPORTANT

Do not apply any additional surface coating to the heater under any circumstances. Use of additional coating other than those applied during manufacture could result in hazardous reactions such as toxic fumes or fires. Additional coatings will void the warranty.

OPTIMUM MOUNTING DISTANCE

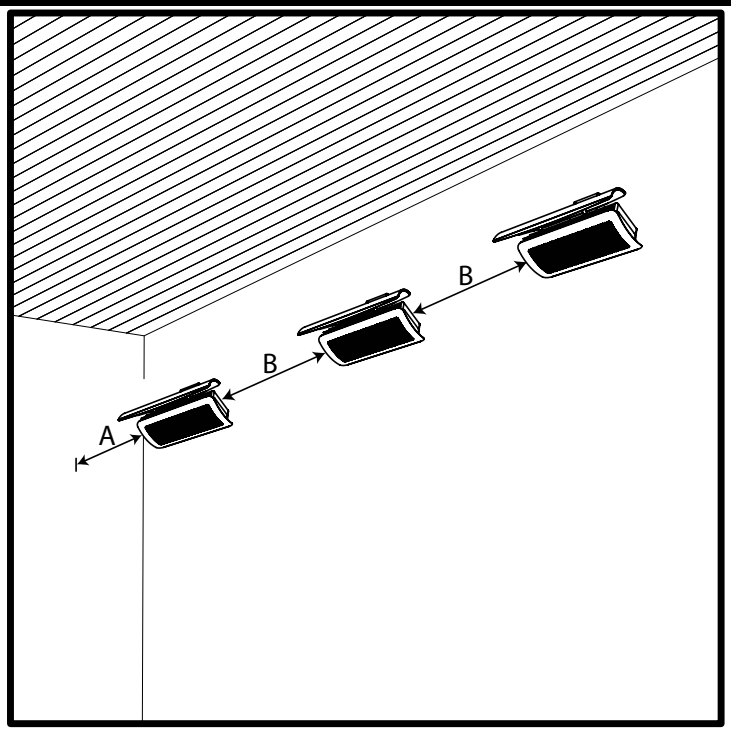

Model	A	B
300 Series	3ft	8 - 10ft
500 Series	3ft	8 - 10ft

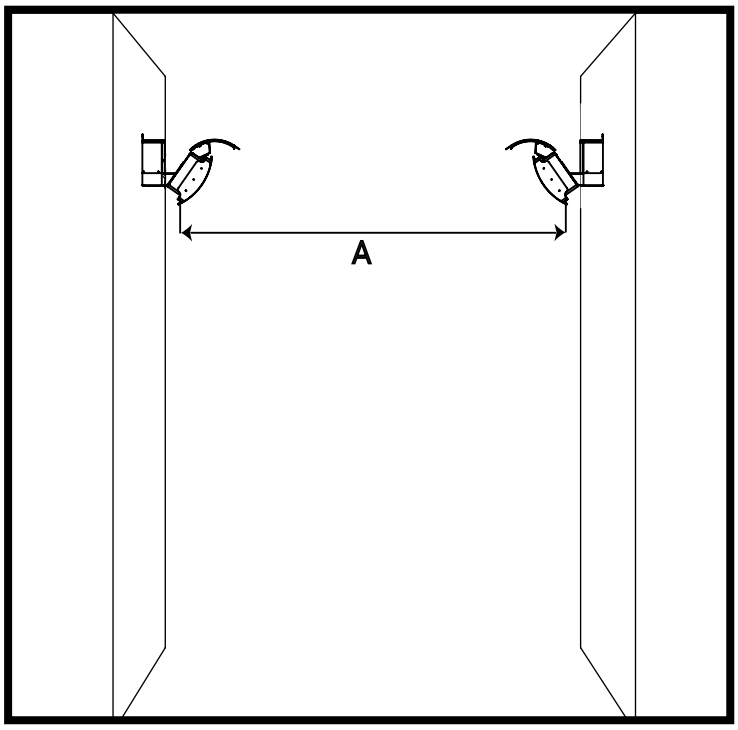

Model	A
300 Series	19 - 23ft
500 Series	26 - 29ft

OPERATION DATA - HONEYWELL CONTROL BOX

The following operation sequence is valid only where the components are installed according to the manufactures assembly and installation instructions. Please do not modify the wiring configuration, gas train or any other part of the heater assembly.

Application

The Honeywell electronic gas burner control system is suitable for atmospheric gas burners for non-permanent operation. Although the Honeywell unit is available non volatile lockout, its configuration in the Tungsten Smart-Heat series heaters limits it to volatile lockout, i.e. the restart from this condition is possible by the interruption and subsequent restoration of the mains power supply.

Features:

- Compliance with CSA standard for automatic gas burner flame monitoring and control systems
- Compliance with EN 298 (European standard for automatic gas burner flame monitoring and control systems)
- Compliance with AGA (Australian standard for automatic gas burner flame monitoring and control systems)
- Flame monitoring based on rectification property of the flame (ionisation)

TECHNICAL DATA	
Supply voltage	110V-50/60Hz
Operating temperature	-20°C / +60°C
Ambient humidity	90%max at 40°C
Protection degree	IPX4
Timings:	
Self Check time	1.5 s
Safety time (TS)	25 s
Drop out time on running flame failure	1 s
Power consumption, at start up	10VA
Power Consumption, Running	4VA
Ignition	
Ignition Voltage	15kV with 40pF load
Spark repetition rate	33 Hz
Max. Cable length	1M
Recommended spark gap	0.14”
Consumption	2,5 VA
Spark energy	3 uAs

OPERATION DATA - HONEYWELL CONTROL BOX CONTINUED...

Directions for use

- Automatic controls are safety devices and shall not be opened. The manufacturer's responsibility and guarantee are invalid if the control is unduly opened.
- A regulation shutdown must occur every 24hours to enable the unit to check its own efficiency (systems for non permanent operation)
- Connect and disconnect the unit only after switching off the power supply
- Avoid exposing the unit to dripping water
- Ventilation and the lowest temperature ensures the longest life of the control

Electrical Installation

- Live and Neutral should be connected correctly; a mistake could cause a dangerous situation.
- Before starting the system check cables carefully for incorrect installation
- The earth terminal of the control, the metal frame of the burner and the earth on the mains supply must be well connected

Operation

At every start, the control unit proceeds to a self-checking of its own components. During the pre-purge or waiting time (TW) the internal circuit makes a test of the flame signal amplifier. Extraneous light or fault in the amplifier will result in the simulation of a flame which will prevent the control from starting.

At the end of the waiting or pre-purge time, the gas valve is energised and the ignition device is operated. In this way, the safety time (TS) begins.

If a flame is detected during the safety time, the ignition device is inhibited and the gas valve remains energised.

If the control does not detect any flame signal during the safety time, at the end of safety time (TS), the unit proceeds to lockout and the gas valve and ignition device are switched off.

If the established flame signal is lost, (during the safety time or during operation thereafter) this will cause the ignition device to be reactivated within 1 second.

If the burner does not light within 25 seconds of ignition reactivation, the heater will enter failure lockout mode and must be reset.

OPERATION DATA HONEYWELL VALVE:

The VK series gas control have been specially developed for application in domestic appliances. The Honeywell Gas Valve is a multi-functional control which incorporates an adjustable direct acting pressure regulator. It is designed for operation on 220/240V.

Standard Specifications

- 1/2" G Female Pipe Thread connection
- Ambient Temperature Range of 0°C to 60°C
- Compact Size: 86.5mm x 63.5mm x 65.9mm
- 50mb Pressure Rating
- 1/2" x 1/2" (BSP- G) Inlet and Outlet
- Earthing terminal – 0.24" spade tab
- Tamper resistant screws
- Top mounted coils that can be field replaced

TECHNICAL DATA	
Max inlet working pressure	50 mbar
Installation group	Group 2
Operating Temperature	0°C to 60°C
Voltage Ratings	220/240VAC 50/60Hz .52A

Adjust Regulator Pressure

- Unscrew the regulator cover.
- Unscrew the outlet plug to measure the outlet regulator pressure by using manometer.
- Adjust the pressure by turning the regulator screw clockwise or anti wise.
- Adjust the pressure according to appliance specification.

⚠ IMPORTANT

Remember to place the regulator cover, outlet and inlet back on.

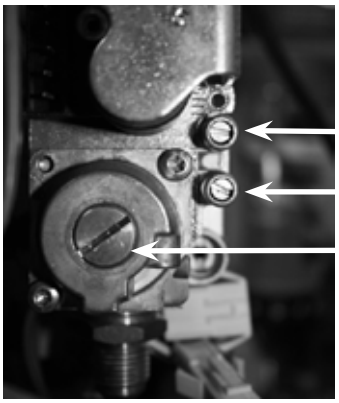

OPERATION DATA - FENWAL CONTROL BOX

The Series 35-60 is 24 VAC Microprocessor Based Direct Spark Ignition Controls designed for use in all types of heating applications. The control utilizes a microprocessor to continually and safely monitor, analyze and control the proper operation of the gas burner. The following operation sequence is valid only where the components are installed according to the manufacturers assembly and installation instructions. Please do not modify the wiring configuration, gas train or any other part of the heater assembly.

Application

The Fenwal electronic gas burner control system is suitable for atmospheric gas burners for non-permanent operation. The Fenwals configuration in the Tungsten Smart-Heat series heaters limits it to volatile lockout, i.e. the restart from this condition is possible by the interruption (for 5 seconds) and subsequent restoration of the mains power supply.

Features:

- 24 VAC microprocessor based DSI control
- Pressure switch monitoring
- System diagnostic LED
- Alarm output (normally closed contact)
- Automatic reset 1 hour after lockout*
- Custom prepurge and interpurge timings**
- Multiple tries for ignition
- Remote or local flame sensing
- Flame sense test pins

Directions for use

Automatic controls are safety devices and shall not be opened. The manufacturer's responsibility and guarantee are invalid if the control is unduly opened.

A regulation shutdown must occur every 24hours to enable the unit to check its own efficiency (systems for non permanent operation)

Connect and disconnect the unit only after switching off the power supply

Avoid exposing the unit to dripping water

Ventilation and the lowest temperature ensures the longest life of the control

Electrical Installation

- The applicable state and local standards regarding electrical safety must be respected.
- Live and Neutral should be connected correctly; a mistake could cause a dangerous situation.
- Before starting the system check cables carefully for incorrect installation
- The ground terminal of the control, the metal frame of the burner and the ground on the mains supply must be well connected

Operation

When a call for heat is received from the thermostat supplying 24 volts to TH/W, the control will reset, perform a self check routine, flash the diagnostic LED, and a pre-purge delay begins. Following the pre-purge period the gas valve is energized and sparks commence for the trial for ignition period.

When flame is detected during the trial for ignition, sparks are shutoff immediately and the gas valve remains energized. The thermostat and main burner flame are constantly monitored to assure the system continues to operate properly. When the thermostat is satisfied and the demand for heat ends, the main valve is de-energized immediately.

Should the main burner fail to light, or flame is not detected during the trial for ignition period, the control will go into lockout. The valve will be turned off immediately. Multi-try Models will attempt two additional ignition trials before going into lockout. The valve relay will be de-energized immediately.

Recovery from lockout requires a manual reset by removing 24 volts from 24 VAC(R) for a period of 5 seconds. If there is still a call for heat after one hour the control will automatically reset and attempt to ignite the burner again.

If the established flame signal is lost the control will respond within 0.8 seconds. The HV spark will be energized for a trial ignition period in an attempt to relight the burner. If the burner does not light the control will de-energize the gas valve. Multi-try models will make two more attempts to relight the burner. If the burner does not relight the control will go into lock out as noted above. If flame is re-established, normal operation resumes.

TECHNICAL DATA	
Supply voltage	18 to 30 VAC 50-60Hz
Operating temperature	-40°F +176°F
Ambient humidity	95%max at 104°F
Protection degree	IP00
Timings:	
Self Check time	1.5 s
Safety time (TS)	10 s
Drop out time on running flame failure	0.8 s
Power consumption, at start up	300mA Max.
Power Consumption, Running	300mA Max.
Ignition	
Ignition Voltage	15kV with 40pF load
Spark repetition rate	50/60 sparks/ sec.
Max. Cable length	1M
Recommended spark gap	3.5mm

OPERATION DATA - DUNGS GAS VALVE

The Dungs GB Valve is a multifunctional Gas Control with combined regulator and safety shutoff valves.

The pressure regulator includes a servo regulator to regulate pressure fluctuations in the mains supply. This ensures a precise volume flow and constant injector pressure.

To shut down the pressure regulator turn the setting device 25 times clockwise until a soft click can be heard.

Standard Specifications

TECHNICAL DATA	
Gas Connection	1/2" RP
Max Inlet Pressure	65 mbar
Pressure Range	2.5mbar to 38mbar
Nominal Flow	3,3 m3/h (Air)
Ambient temperature	5 °F to -158 °F 32 °F to -158 °F at LPG
Automatic shut-off valves	Class B as per EN 126
Group	2
Pressure Regulator	Class C
Degree of protection	IP40

TECHNICAL DATA	
Opening Time	Fast Opening <1sec Slow Opening <10 sec
Closing Time	<1 sec
Voltage Frequency	~(AC) 50 - 60 Hz 24 V +10 % – 15 %
Load of coil (24 V, 230 V)	2 x 5,5 VA
Electrical connection	Molex System connection coil or Option: Connection box with integrated cable
Installation position	Solenoid at any position between vertical and horizontal axis.

OPERATION DATA - WHITE RODGERS VALVE

The White Rodgers Gas Valve is a compact multi-functional control which incorporates an adjustable direct acting pressure regulator. It operates on 240V.

Standard Specifications

- Inlet Screen – will filter to 180 microns
- Ambient Temperature Range of 32°F to -140°F
- Compact Size: 86.5mm (3.4") x 63.5mm (2.5") x 65.9mm (2.6")
- 50mb Pressure Rating
- Class 'B' Group 2 Direct Acting Solenoid Valves with high sealing force
- 3/8" x 3/8" (BSP Pl.) Inlet and Outlet
- Opening time < 0.25 seconds
- Closing time < 0.25 seconds
- Earthing terminal – 6mm spade tab
- Tamper resistant screws
- Top mounted coils and electronics that can be field replaced without entering the gas stream.

TECHNICAL DATA	
Max Working pressure	50 mbar
Installation group	Group 2
Operating Temperature	32°F to -140°F
Regulator adjustment range	9.2 to 13.7 mbar
Voltage Ratings	24VAC 50/60Hz

ELECTRICAL DIAGRAM

SEE INSTRUCTION MANUAL FOR DETAILS ON HOW TO CONNECT THE ELECTRICAL COMPONENTS.

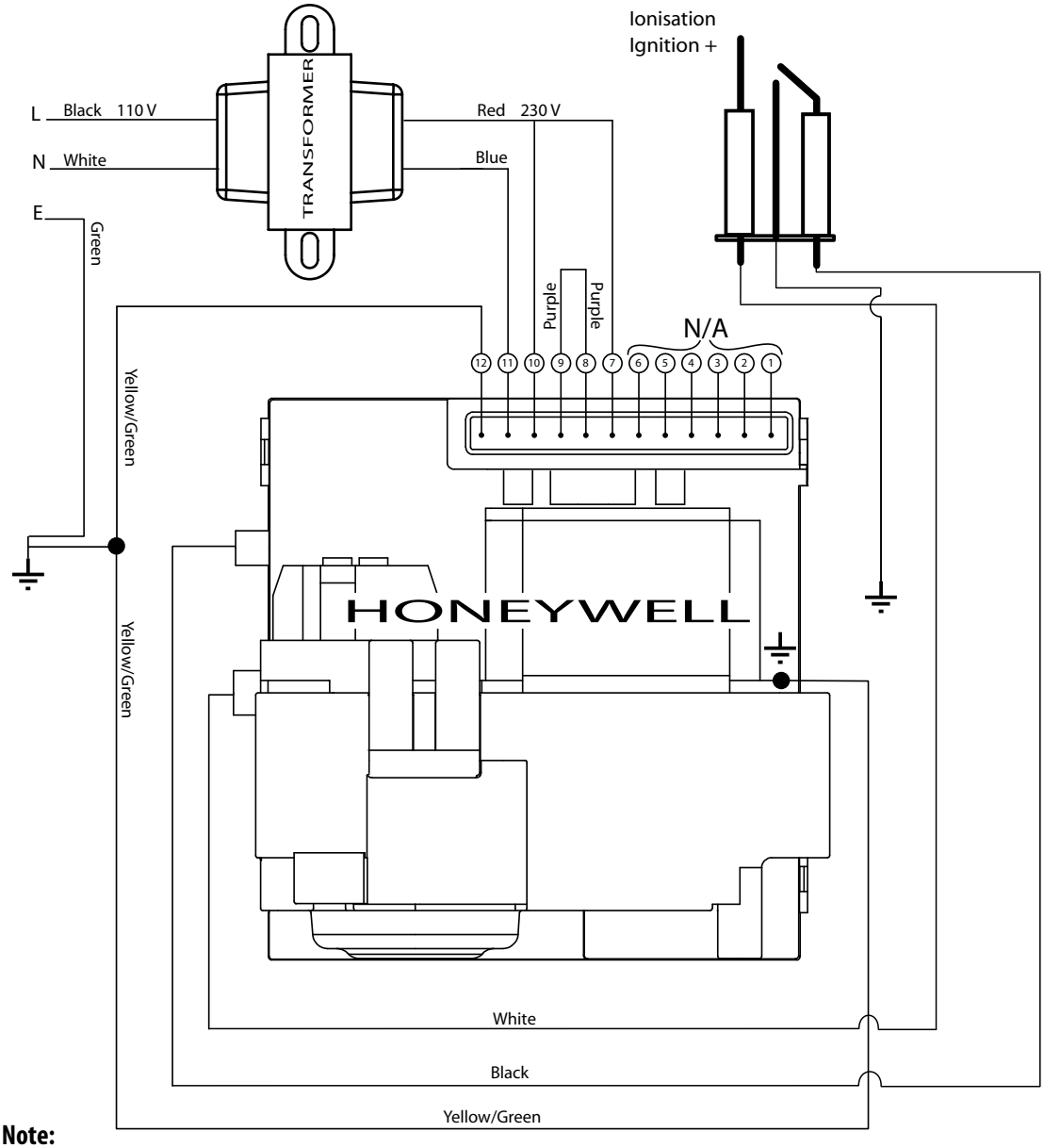

Note:
If any of the original wire as supplied with the heater must be replaced, it must be replaced with 18AWG, 90°C type UL approved wire or its equivalent. If Transformer must be replaced, a UL approved model of similar type must be used.

ELECTRICAL DIAGRAM

SEE INSTRUCTION MANUAL FOR DETAILS ON HOW TO CONNECT THE ELECTRICAL COMPONENTS.

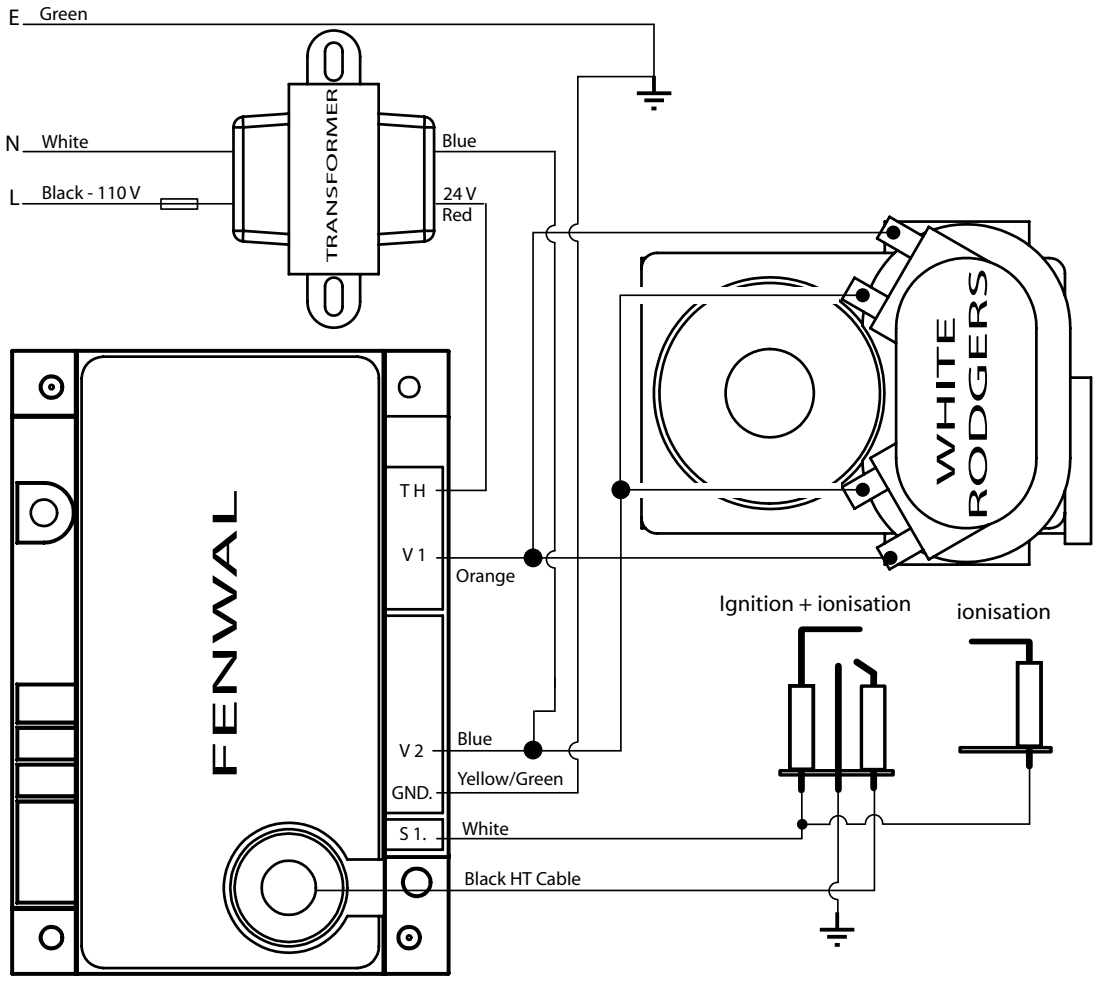

Note:
If any of the original wire as supplied with the heater must be replaced, it must be replaced with 18AWG, 90°C type UL approved wire or its equivalent. If Transformer must be replaced, a UL approved model of similar type must be used.

ELECTRICAL DIAGRAM

SEE INSTRUCTION MANUAL FOR DETAILS ON HOW TO CONNECT THE ELECTRICAL COMPONENTS.

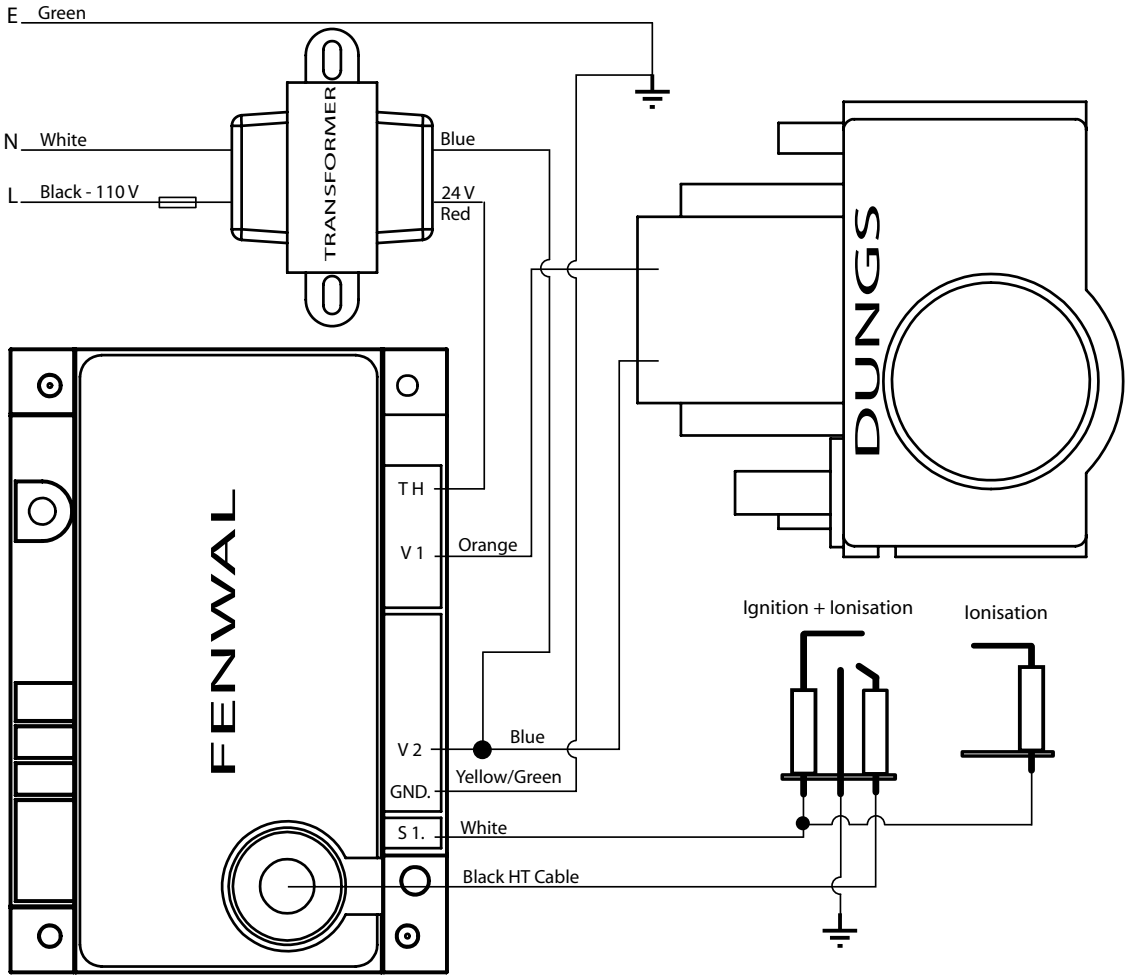

Note:
If any of the original wire as supplied with the heater must be replaced, it must be replaced with 18AWG, 90°C type UL approved wire or its equivalent. If Transformer must be replaced, a UL approved model of similar type must be used.

REPLACEMENT PARTS

White Rodger

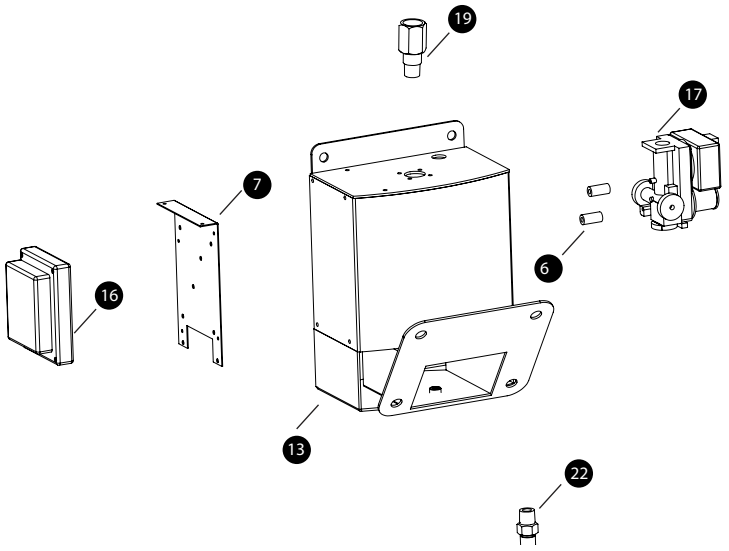

Honeywell

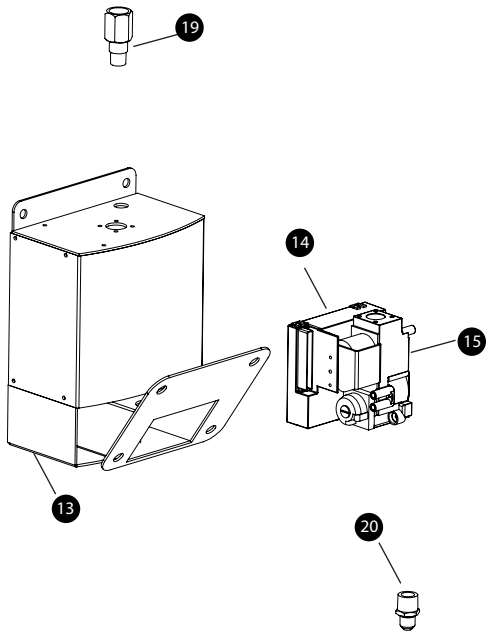

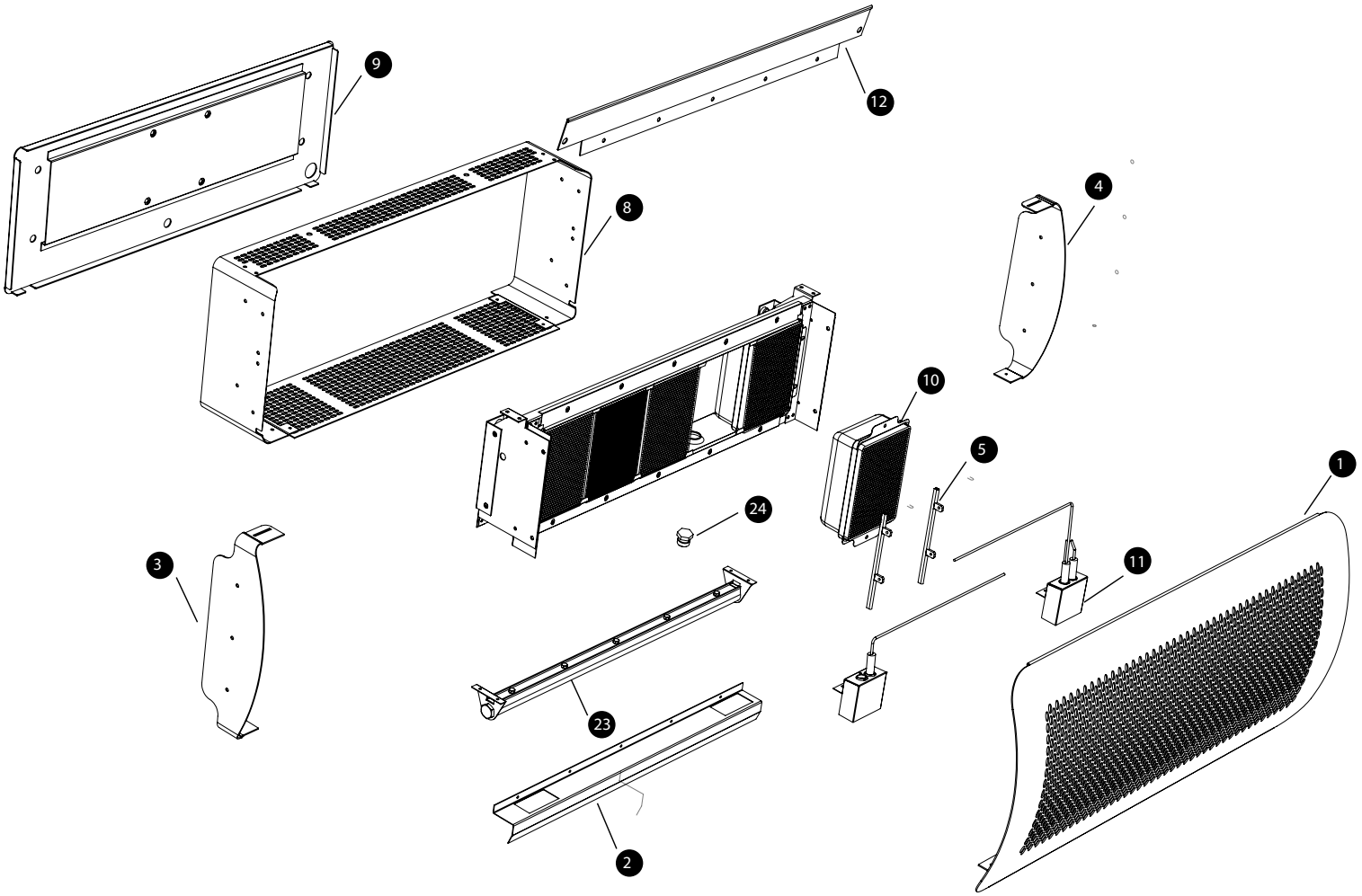

REPLACEMENT PARTS DESCRIPTION

No.	Description	Part No. 300 Series	Part No. 500 Series
1	Front Cover	BH8080039	BH8080040
2	Flame Protector	BH8080041-1	BH8080042-1
3	Right Side Mount	BH8080043	BH8080043
4	Left Side Mount	BH8080044	BH8080044
5	Ionization Holder Assembly - including Tungsten spacer	BH8080045	BH8080045
6	White Rodger Spacer		
7	Control Mount		
8	Rear Housing	BH8080046	BH8080047
9	Rear Cover Assembly	BH8080048	BH8080049
10	Burner	BH8080030	BH8080030
11	Wiring Harness + Ignitor Assembly- Honeywell	BH8080012-1	BH8080013-1
12	Inner Skin	BH8080031	BH8080032
13	Wall Bracket Assembly	BH8080001-1	BH8080001-1
14	Honeywall Control	BH8080015	BH8080015
15	Honeywell Gas Valve	BH8080014	BH8080014
16	Fenwal Control		
17	White Rodger 24V Gas Valve		
18	Intentionally left blank		
19	Gas Inlet Fitting (Honeywell 1/2" Gas Valve)	BH8080035	BH8080035
20	Gas Outlet Fittings (Honeywell 1/2"Gas Valve)	BH8080036	BH8080036
21	Intentionally left blank		
22	Gas Outlet Fitting (WhiteRodgers Gas Valve)		
23	Manifold Assembly - Natural Gas	BH8080037	BH8080038
23	Manifold Assembly - LPG	BH8080093	BH8080090
24	Injector (LPG)	BH8080016	BH8080016
24	Injector (NG)	BH8080017	BH8080017
25	Wall Bracket Replacement Screw Set including Gas Hose	BH8080051-1	BH8080051-1
26	Intentionally left blank		
27	Deflector Screw Set including arm	BH8080052	BH8080052
28	Transformer – 110V-230V (Honeywall)	BH8080050	BH8080050

Note: For more information on obtaining spare parts contact the place of purchase or

BROMIC HEATING
Head Office: 1 Suttor Street, Silverwater, Sydney, NSW 2128 Australia
Telephone: 1300 276 642 (within Australia) or +61 2 9748 3900 (from overseas) Fax: +61 2 9748 4289
Email: info@bromicheating.com Web: www.bromicheating.com

POST-INSTALLATION REPORT
FOR TUNGSTEN SMART-HEAT GAS RADIANT HEATERS

AFTER HEATER INSTALLATION PLEASE PHOTOCOPY, COMPLETE, & SEND THIS REPORT BY:
FAX TO (02) 9748 4289 or BY MAIL TO Bromic Heating Pty Ltd, Suite 1305, 13223 Black Mountain Road San Diego, California 92129 USA or SCAN AND EMAIL TO info@bromicheating.com

Customer Business Name:

Date: dd / mm / yyyy

Site Address:

Suburb:

State: Postcode:

Customer Contact Details:

Name:

Position:

Ph: ( ) Fax: ( )

Mobile:

Installer Contact Details:

Name:

Position:

Ph: ( ) Fax: ( )

Mobile:

Please fill in the relevant information or circle the appropriate Yes/No responses below:		
How many Tungsten Smart-Heat heaters are installed on this site?	300: _____	500: _____
What type of gas is used?	Propane	Natural Gas
Is/Are the heater(s) exposed to salt air or any other corrosive or chemical atmosphere?	Yes	No
Does the heater(s') installation location pose a hazard to the site?	Yes	No
Do heater clearances match the minimum requirements outlined in the "Installation Requirements" section of the ***Installation, Operation and Service Manual***?	Yes	No
Is the gas supply line adequately sized for the number of heaters installed?	Yes	No
Have gas lines been purged of air?	Yes	No
Have gas lines been checked for leaks with a soapy water solution?	Yes	No
Was the heater field tested and operated without malfunction?	Yes	No
What is the **inlet** gas supply pressure?	_____ kPa	
What is the gas valve **outlet** pressure (at test point)?	_____ kPa	

Signature of authorised person:

Name:

Company: Position:

Date: dd / mm / yyyy

TROUBLESHOOTING

SYMPTOM	POSSIBLE CAUSE	CORRECTIVE ACTION
Heater will not turn on	1. No power 2. No gas	1. Have authorized electrician check power supply 2. Have authorized gas fitter check gas supply
Heater turns on, but then cycles on and off	1. Insufficient flame on ionisation rod 2. Drafty conditions 3. Insufficient earth connection between heater and control box	1. • Check and set gas pressure • Check and clear obstruction to burner venturi and injectors 2. Discontinue use in high winds 3. Replace wiring harness and clean connections to ensure good grounding
No gas	1. Air in gas line 2. Manual shut-off valve closed 3. Regulator sticking 4. Regulator reversed	1. Purge line 2. Open valve 3. Replace regulator 4. Remove and install properly
Low ceramic tile surface temperature	1. Low manifold gas pressure 2. Low gas inlet pressure 3. Orifice partially blocked with foreign matter 4. Combustion by-products not adequately ventilated 5. Manifold misaligned from excessive torque applied on pipe at installation 6. Gas supply piping too small 7. Foreign matter in venturi tube	1. Adjust valve regulator until 5”W.A for natural gas, or 11” W.A for propane is obtained 2. Adjust main supply regulator until at least 6” W.C for natural gas or 11” W.C for propane precedes heater’s control assembly 3. Clean orifice 4. Provide adequate ventilation of by-products 5. Replace manifold 6. Increase gas pressure or replace piping 7. Remove with bottle brush
Gas odour	1. Loose pipe connection 2. Defective regulator 3. Defective manual shut-off valve 4. Defective gas control valve 5. Loose flexible hose	1. Check all connections with soap solution and tighten where necessary 2. Replace regulator 3. Replace manual shut-off valve 4. Replace gas control valve 5. Tighten flexible hose
Burning of gas/air mixture inside burner casting (flashback)	1. Separation of ceramic tiles 2. Ceramic tile(s) cracked 3. Heater mounted at incorrect angle 4. Excessive drafts	1. Replace burner assembly 2. Replace burner assembly 3. Check angle of heater. See heater nameplate. 4. Shield or relocate heater.
Control assembly is overheating	1. Heater not mounted correctly	1. Mount wall bracket / control housing against a vertical flat surface, following the instructions outlined in the installation section of this manual. Always use supplied parts to mount heater.
Carbon formation on ceramic tile surface of burner	1. Misaligned orifice 2. Obstruction in venturi tube 3. Low gas pressure 4. Wrong gas supplied to heater	1. Consult sales agent or factory 2. Clean with bottle brush 3. Provide required pressure 4. Check label for type of gas required

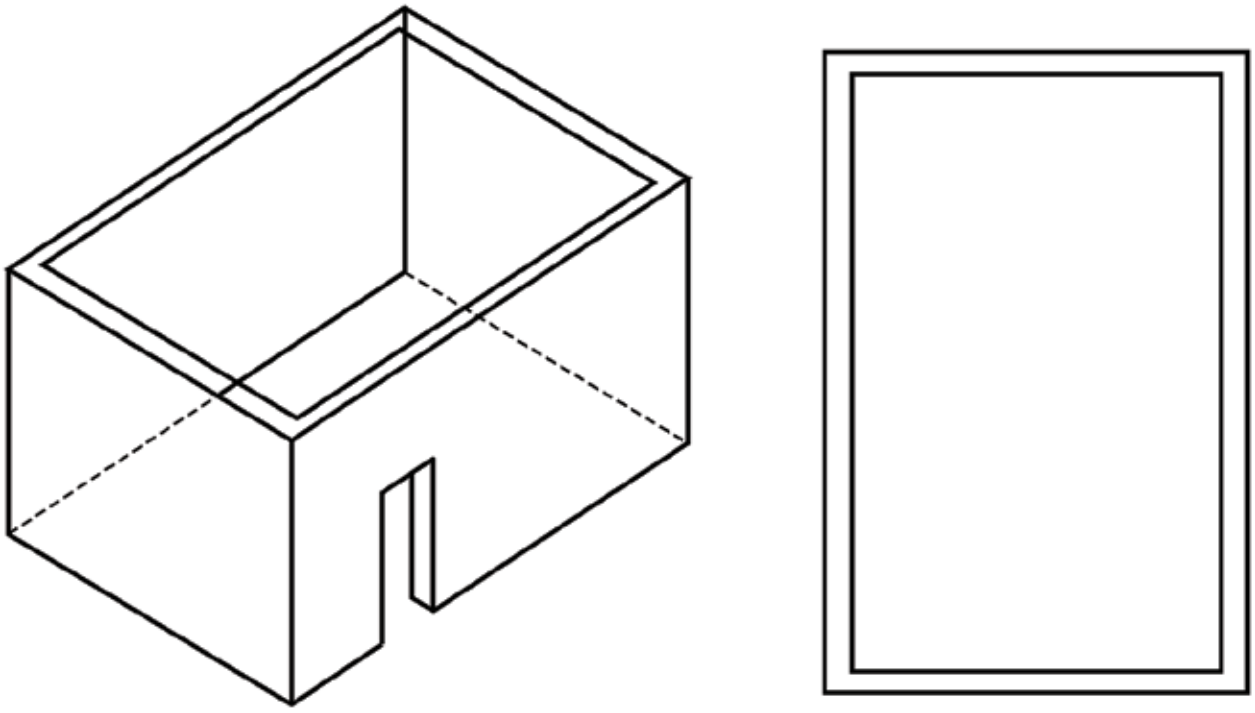

OUTDOOR AREA–EXAMPLE 1

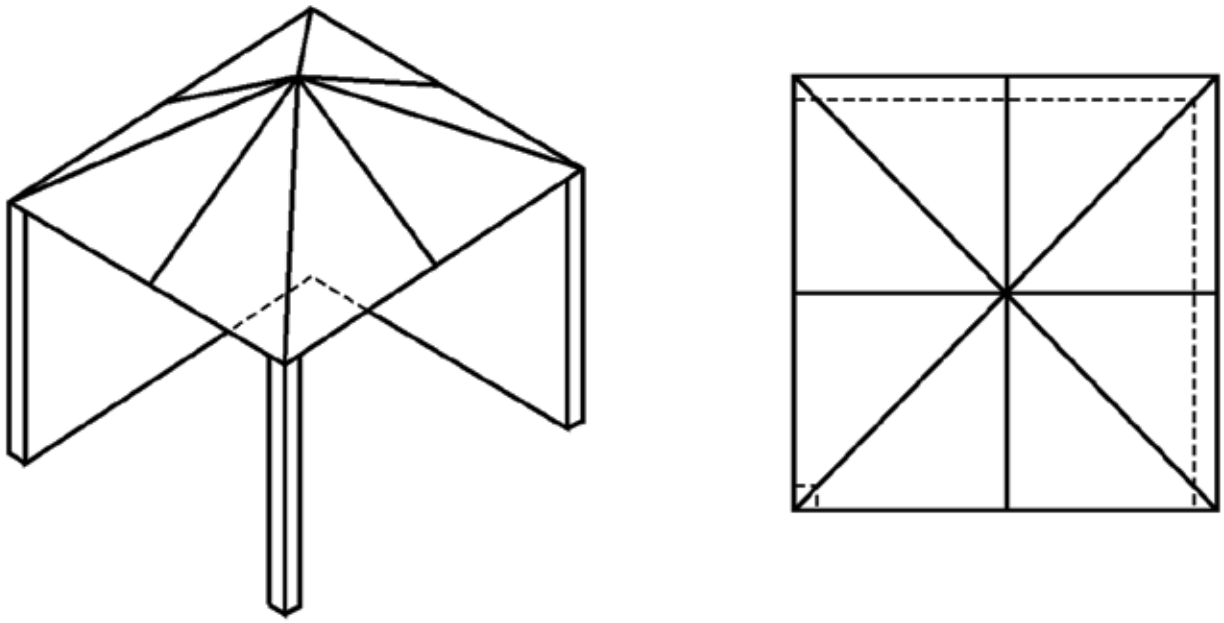

OUTDOOR AREA–EXAMPLE 2

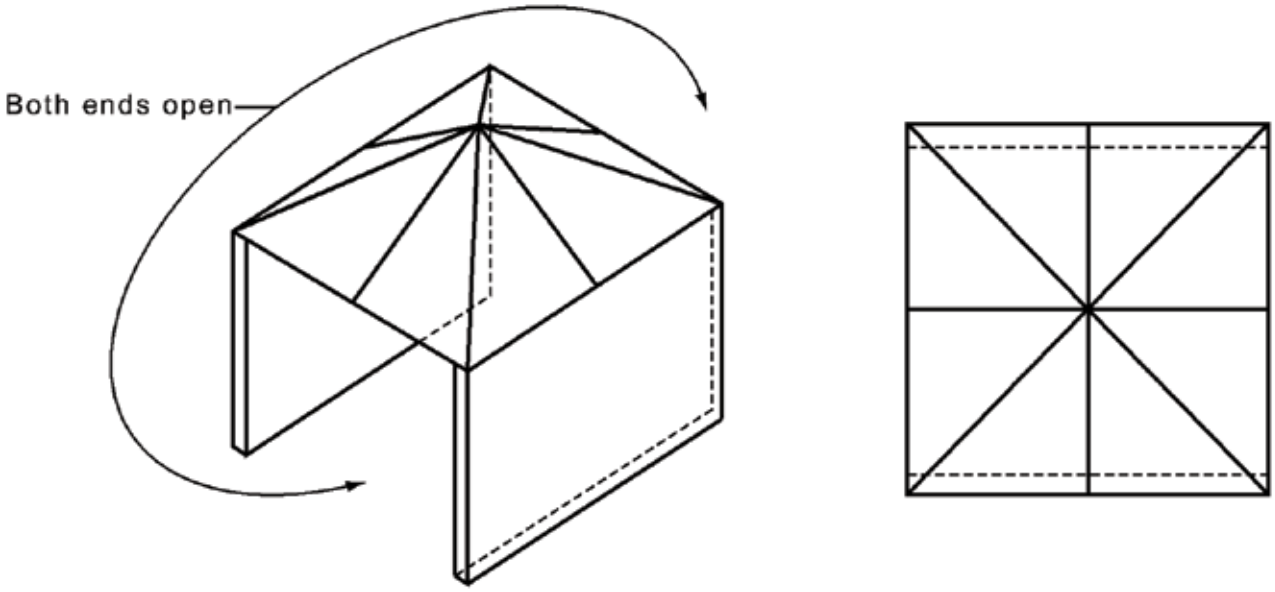

OUTDOOR AREA–EXAMPLE 3

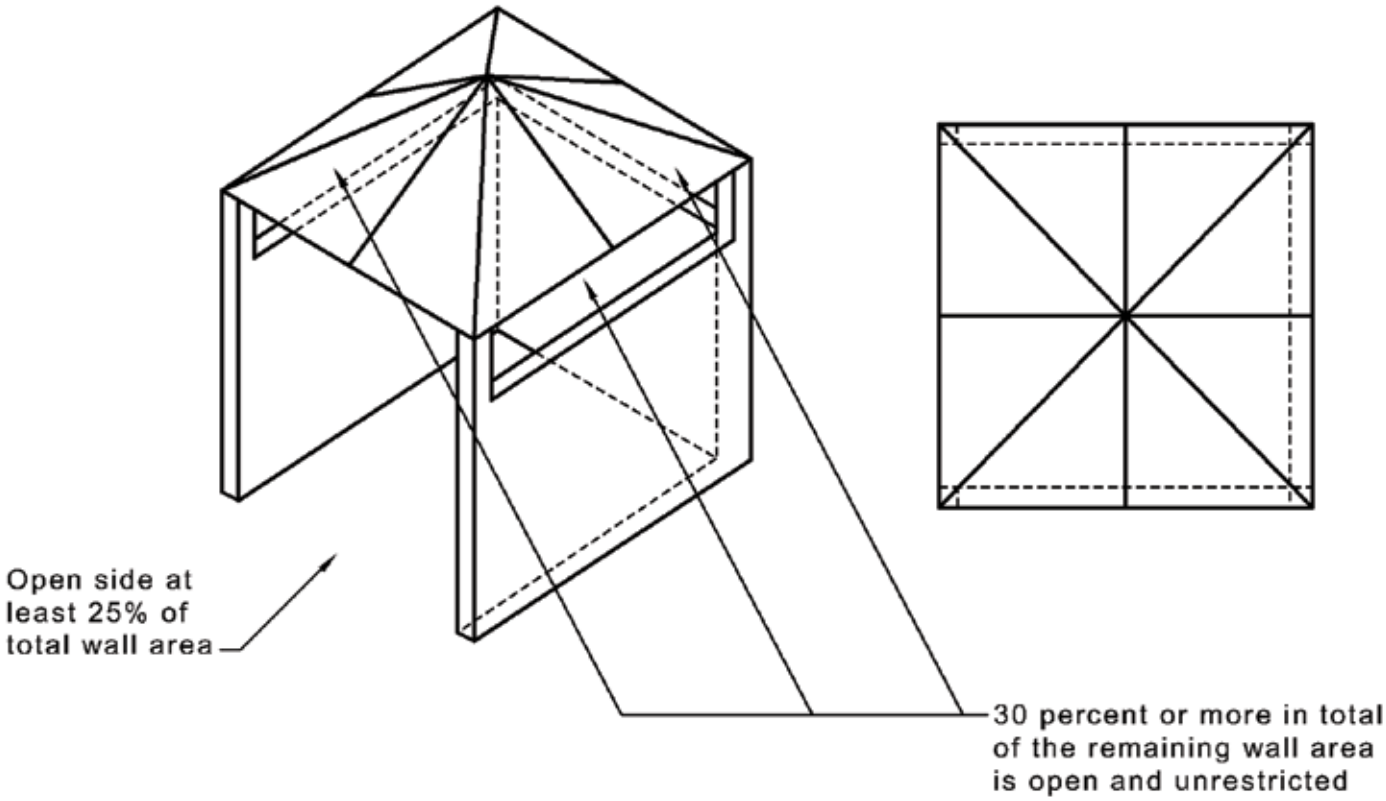

OUTDOOR AREA–EXAMPLE 4